ILD1000G INDUCTION LOOP DRIVER

AMPETRONIC

www.ampetronic.com

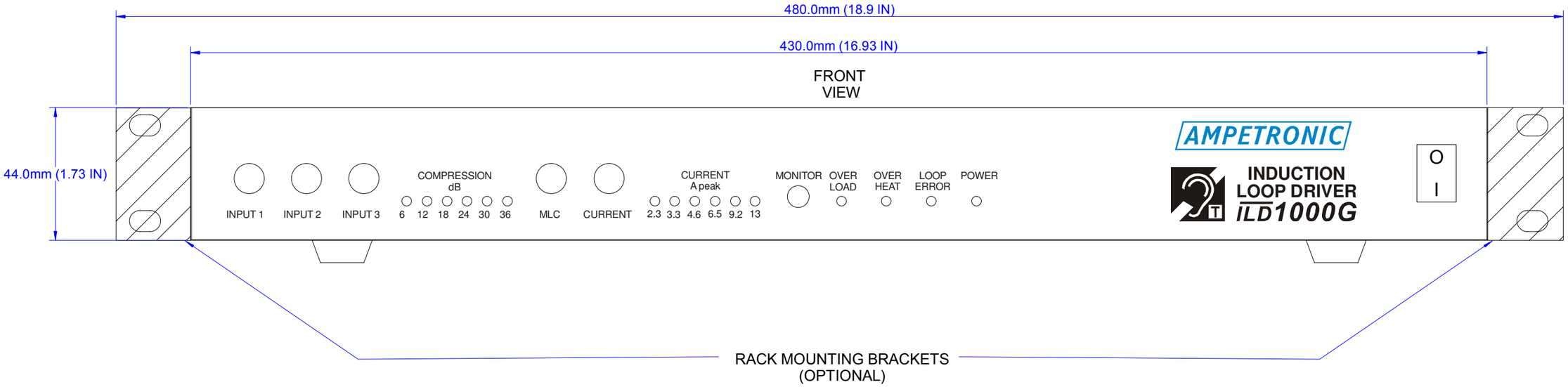

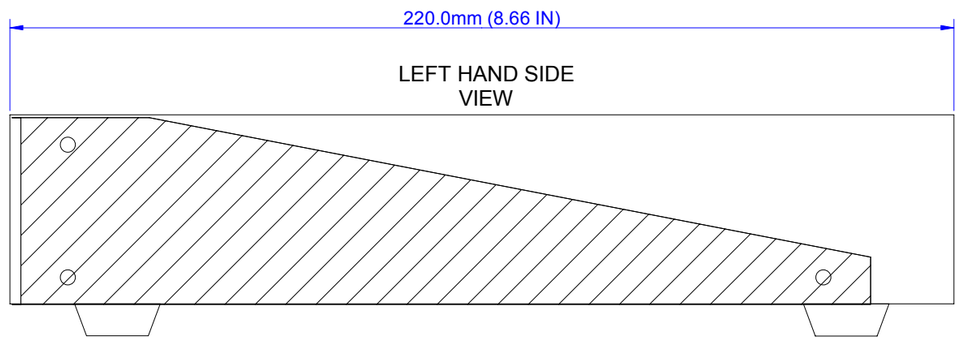

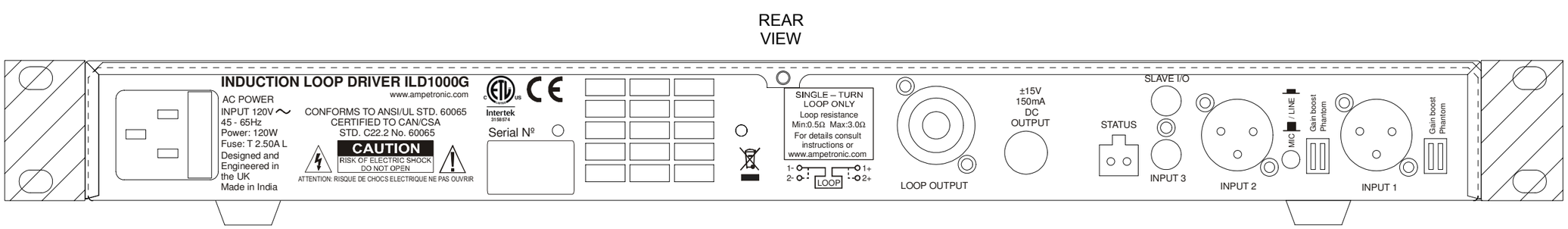

ILD1000G Outline Drawing UP45101-1